ACME HOLDERS, POSTS & RISERS

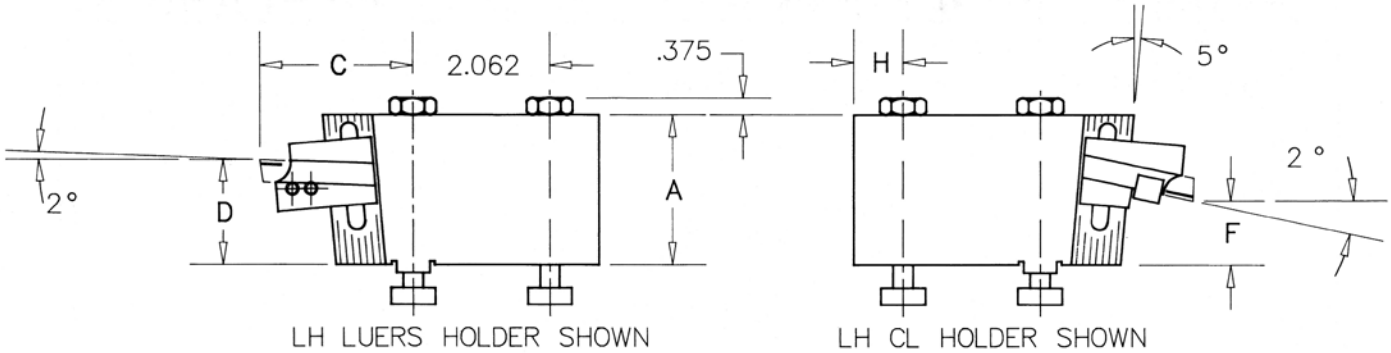

380 POST WITH X-18A HOLDER

BLADE EXTENSION	A	C	D		F		H
			MIN	MAX	MIN	MAX	
9/ 6	2.687	2.89	1.187	2.562	.437	.812	.500

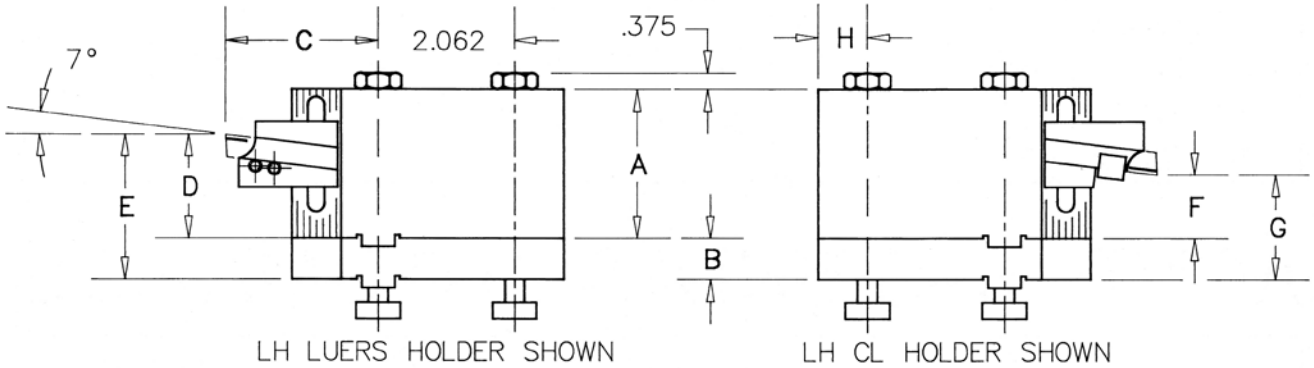

379 POST & RISER WITH X-18A HOLDER

BLADE EXTENSION	A	B	C	D		E		F		G		H
				MIN	MAX	MIN	MAX	MIN	MAX	MIN	MAX	
9/16	3.250	1.18	2.53	2.437	3.093	3.625	4.28	1.687	2.343	2.875	3.53	.53

381 POST & RISER WITH X-18 HOLDER

BLADE EXTENSION	A	B	C	D		E		F		G		H
				MIN	MAX	MIN	MAX	MIN	MAX	MIN	MAX	
1/4	2.625	.96	3.00	1.017	2.392	1.977	3.352	.343	1.718	1.303	2.678	.50
1/2	2.625	.96	3.25	1.048	2.423	2.008	3.383	.312	1.687	1.272	2.647	.50

381 POST & RISER WITH X-18A HOLDER

BLADE EXTENSION	A	B	C	D		E		F		G		H
				MIN	MAX	MIN	MAX	MIN	MAX	MIN	MAX	
1/2	2.625	.96	3.62	.264	2.639	2.224	3.599	.096	1.471	1.056	2.431	.50
3/4	2.625	.96	3.88	.295	2.670	2.255	3.630	.065	1.440	1.025	2.400	.50

382 POST & RISER WITH X-18A HOLDER

BLADE EXTENSION	A	B	C	D		E		F		G		H
				MIN	MAX	MIN	MAX	MIN	MAX	MIN	MAX	
3/4	2.687	1.218	3.441	1.958	2.583	3 176	3.801	.728	1.353	1.946	2.571	.563
1"	2.687	1.218	3.691	1.988	2.613	3.206	3.831	.698	1.323	1.916	2.541	.563